Product Description:Brush Cutter Attachment
Model Number:BCA1200
Body Number:0760054001_S
Version: A
Issue Date: 2017/01/18

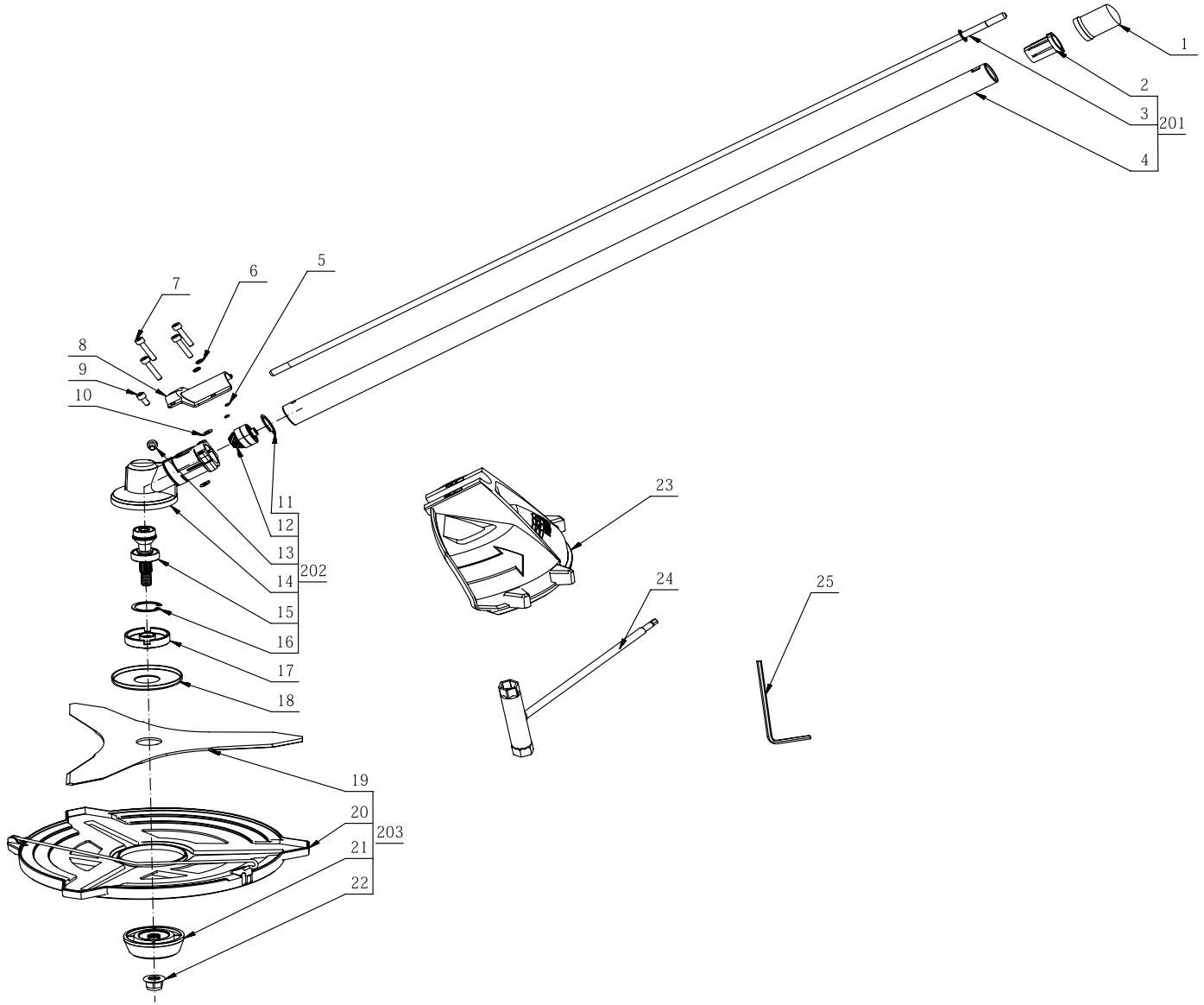

Repair Parts_Brush Cutter_BCA1200

Index No.	Art. No.	Description	QTY in machine	Weight (g)	Size LxWxH (mm)	MPQ	Repairable or Not?	Standard Repair Time (min.)
1	3128734001	Sleeve	1	4.6	ϕ29x42	1	Y	3
2	3128556001	Guiding Block	1	4.3	33x26x24.5	1	Y	3
3	2824792002	Shaft Assembly	1	255.8	ϕ14.5x857	1	Y	10
4	2824791002	Tube Assembly	1	244.3	ϕ25x820	1	Y	10
5	5690203001	O Ring	2	1.2	ϕ5.5x1	10	Y	1
6	5650015012	Spring Washer	2	1	ϕ5x1	10	Y	1
7	5620216003	Screw	4	5.8	ϕ8.5x25	10	Y	1
8	3705417001	Fixing Board	1	58.5	66x48x19	1	Y	3
9	5620213003	Hexagon Socket Screw	1	138.2	ϕ8x13	10	Y	1
10	5650598001	Washer	2	0.2	5.3x11x0.4	10	Y	1
11	5660151001	Circlips For Hole	1	1	ϕ24x1	10	Y	1
12	2824588002	Pinion Assembly	1	57	ϕ24x1	1	Y	30
13	5620546001	Hexagon Socket Screw	1	6	ϕ9x12	10	Y	1
14	3421862001	Gear Case	1	117.5	109x66x70	1	Y	30
15	2824589002	Shaft Assembly	1	109	ϕ28x69.5	1	Y	30
16	5660021002	Circlips For Hole	1	1.2	ϕ28x1	10	Y	1
17	3552509001	Inner Flange	1	66.3	ϕ44.5x13.5	1	Y	20
18	3706103001	Shield	1	39	ϕ70x5.5	1	Y	20
19	3706105001	Blade	1	390	ϕ304x2.5	1	Y	10
20	2824948002	Blade Cover	1	147	ϕ312x37	1	Y	1
21	3421864001	Outer Flange	1	80	ϕ60x22	1	Y	10
22	5630292001	Nut	1	14	ϕ11x13.5	10	Y	5
23	2824703001	Guard ASSY	1	167	335x148x132	1	Y	3
24	5680217001	Wrench	1	163.8	225x100x20	1	Y	1
25	5680164001	Inner Hexagon Spanner	1	15.6	95x45x4	1	Y	1
201	2824590002	Connecting Tube ASSY	1	504.4	ϕ25x857	1	Y	5
202	2824954004	Gear Case ASSY	1	291.7	109x96x66	1	Y	20
203	(2824941002) ABB1203	Blade Set	1	631	ϕ312x57	1	N	5